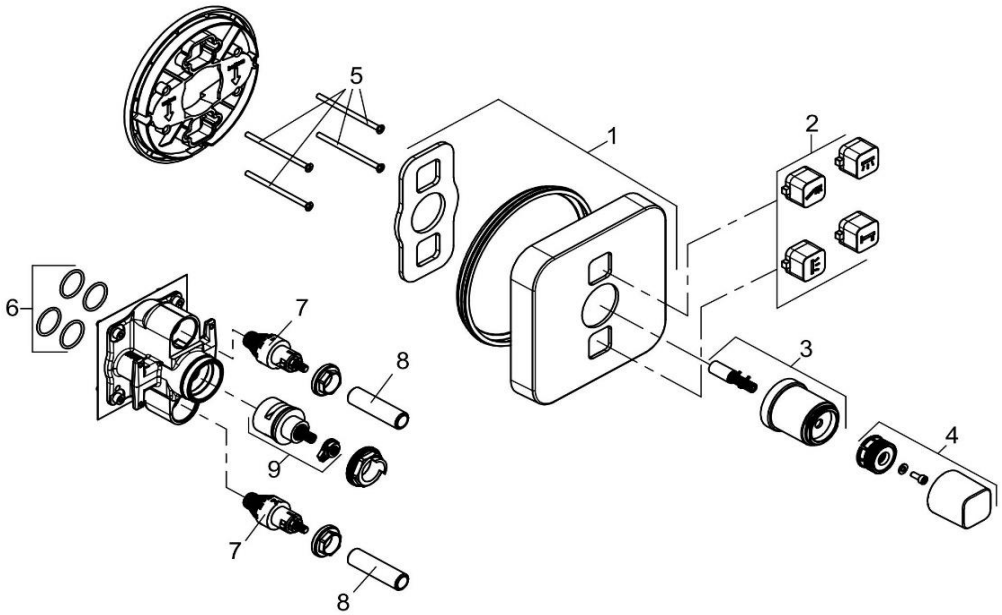

387110538		Unterputz-Armatur	concealed mixer
1	7329005-00	UP - ROSETTE	ESCUTCHEON, CONCEALED
2	7328305-00	DRUCKTASTEN VIERECKIG	PRESS BUTTON SQARE
3	7351205-00	HÜLSE	SLEEVE
4	7351105-00	GRIFF PUSH	HANDLE PUSH
5	7329235-00	SCHRAUBEN SET	SCREW SET
6	7301100-00	DICHTUNGSSATZ	SEALING SET
7	7691900-00	MAGNETVENTIL	MAGNETIC VALVE
8	93088800-00	HÜLSE	SLEEVE
9	7567800-00	KERAMIK - OBERTEIL	CERAMIC HEAD PART