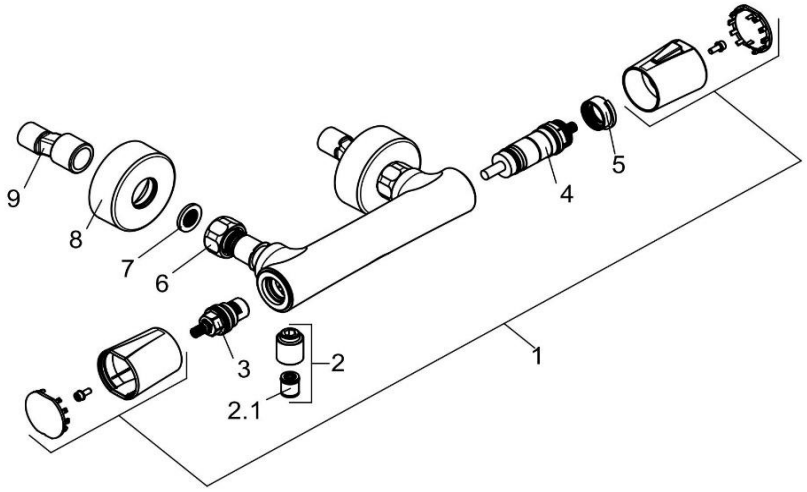

351000538		Thermostat Brausearmatur DN 15	thermostatic shower mixer DN 15
1	7454805-00	GRIFF - SET	HANDLE SET
2	7364605-00	BRAUSEANSCHLUSSNIPPEL	SHOWER CONNECTING NIPPLE
2.1	7510600-00	RÜCKFLUSSVERHINDERER	BACK FLOW PREVENTER
3	7505400-00	KERAMIK - OBERTEIL	CERAMIC HEAD PART
4	7447000-00	THERMOSTAT	TEMPERATURE CONTROL UNIT
5	93080659-00	JUSTIERBUCHSE	SLEEVE FOR ADJUSTMENT
6	7451305-00	WANDARMATURENANSCHLUSS	WALL CONNECTING NIPPLE
7	95502535-00	SCHMUTZFANGSIEB F. THERMOSTAT	FILTER FOR THERMOSTAT MIXER
8	7469805-00	ROSETTE	ESCUTCHEON
9	7655204-00	S - ANSCHLUSS	S - CONNECTIONS