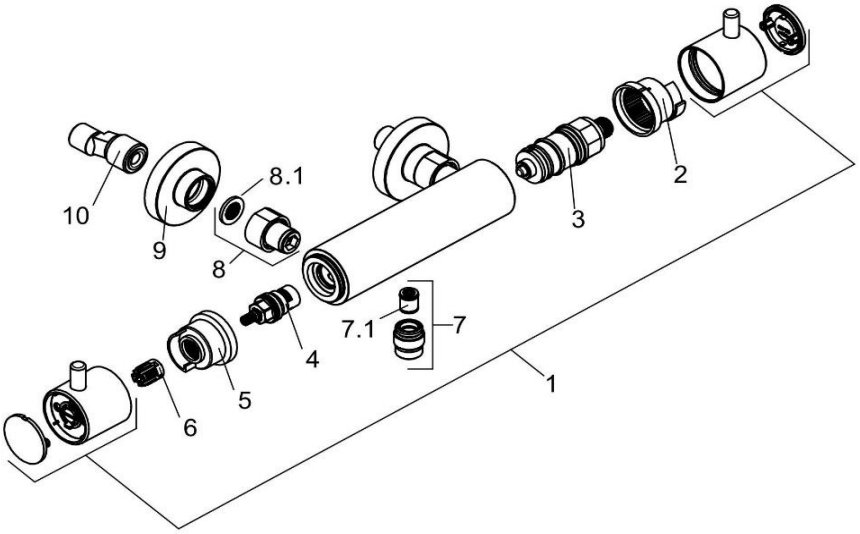

352035338		Thermostat Brausearmatur DN 15	thermostatic shower mixer DN 15
1	7489853-00	GRIFF - SET BOZZ	HANDLE SET BOZZ
2	93091411-00	JUSTIERBUCHSE	SLEEVE FOR ADJUSTMENT
3	7639000-00	THERMOSTAT	TEMPERATURE CONTROL UNIT
4	7878700-00	KERAMIK - OBERTEIL	CERAMIC HEAD PART
5	93039253-00	JUSTIERBUCHSE	SLEEVE FOR ADJUSTMENT
6	93045000-00	GRIFFBEFESTIGUNG	HANDLE MOUNTING
7	7558253-00	BRAUSEANSCHLUSSNIPPEL	SHOWER CONNECTING NIPPLE
7.1	7510600-00	RÜCKFLUSSVERHINDERER	BACK FLOW PREVENTER
8	7449553-00	WANDARMATURENANSCHLUSS	WALL CONNECTING NIPPLE
8.1	95502535-00	SCHMUTZFANGSIEB F. THERMOSTAT	FILTER FOR THERMOSTAT MIXER
9	7376153-00	ROSETTE	ESCUTCHEON
10	7655100-00	S - ANSCHLUSS	S - CONNECTIONS

KLUDI