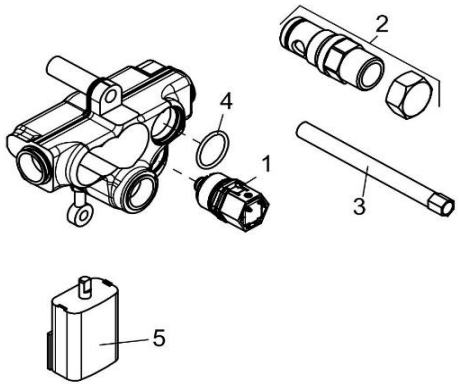

38004		UP Rohbau-Set	concealed electronic body
1	7605300-00	MAGNETVENTIL	MAGNETIC VALVE
2	7327500-00	SPÜLSET	RINSE SET
3	92917600-00	SECHSKANTSCHLÜSSEL	HEXAGON KEY
4	92503311-00	O - RING	O-RING
5	7678800-00	BATTERRIEFACH	BATTERY BOX