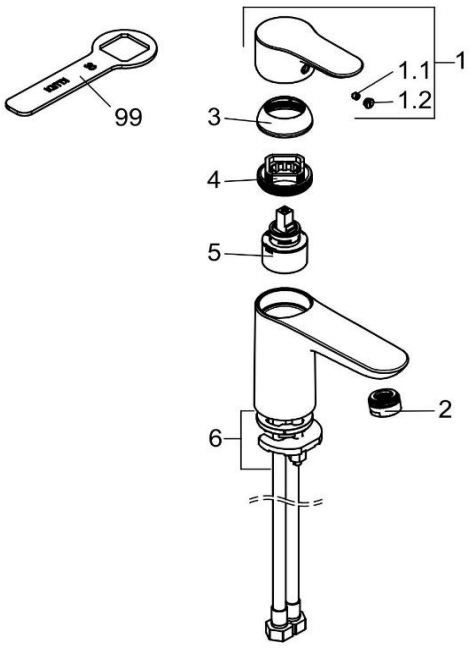


| 321260572 | | Waschtisch-Einhandmischer DN 15 | single lever basin mixer DN 15 |
|---|---|---|---|
| 1 | 7504705-00 | HEBEL OBJEKTA | LEVER OBJEKTA |
| 1.1 | 92204601-00 | GEWINDESTIFT | GRUB SCREW |
| 1.2 | 93089705B-00 | STOPFEN | PLUG |
| 2 | 7306605-00 | STRAHLREGLER | AERATOR |
| 3 | 93090805-00 | ABDECKKAPPE | COVER CAP |
| 4 | 93090900-00 | SPANNSCHRAUBE | FASTENING SCREW |
| 5 | 7560500-00 | STEUEREINHEIT | CERAMIC CARTRIDGE |
| 6 | 7439900-00 | BEFESTIGUNGSSATZ | MOUNTING KIT |
| 99 | 92914900-00 | SPANNSCHRAUBENSCHLÜSSEL | WRENCH FOR FASTENING SCREW |
| | | | |
| | | | |
| | | | |
| | | | |
| | | | |
| | | | |
| | | | |
| | | | |
| | | | |
| | | | |
| | | | |
| | | | |
| | | | |