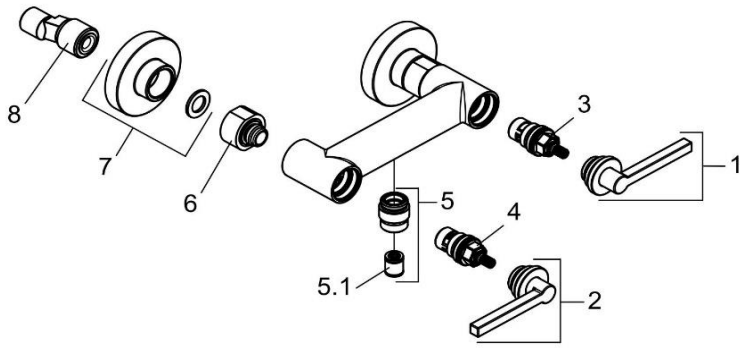

207100515		Brausearmatur DN 15	shower mixer
1	7379505-00	GRIFF C - NOVA FONTE	HANDLE C - NOVA FONTE
2	7379605-00	GRIFF H - NOVA FONTE	HANDLE H - NOVA FONTE
3	7383200-00	KERAMIK - OBERTEIL	CERAMIC HEAD PART
4	7371900-00	KERAMIK - OBERTEIL	CERAMIC HEAD PART
5	7578005-00	BRAUSEANSCHLUSSNIPPEL	SHOWER CONNECTING NIPPLE
5.1	7510600-00	RÜCKFLUSSVERHINDERER	BACK FLOW PREVENTER
6	7380405-00	WANDARMATURENANSCHLUSS	WALL CONNECTING NIPPLE
7	7374705-00	ROSETTE	ESCUTCHEON
8	7655100-00	S - ANSCHLUSS	S - CONNECTIONS